FRANZ VIEGENER

Lollipop FV210/J2

Features

Roman tub Faucets.

- *All brass construction*
- *Brass valve bodies*
- *Quarter-turn ceramic cartridges*
- *Stationary spout with recessed laminar device*
- *11" spout reach*

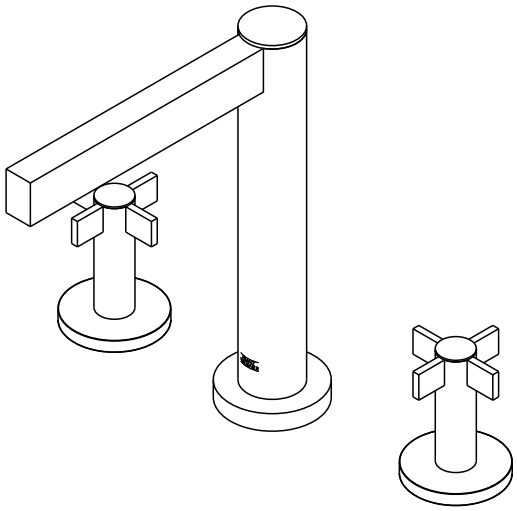
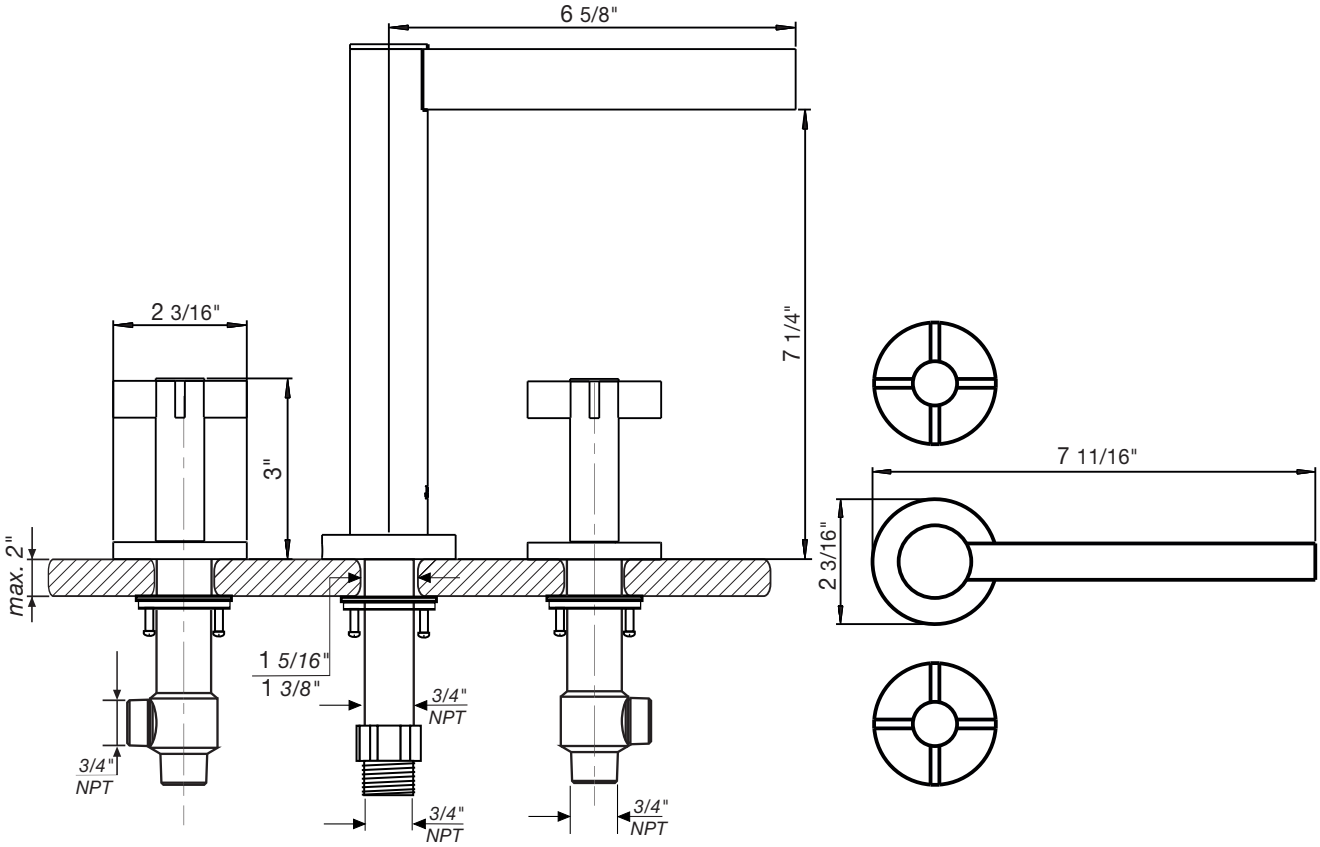
Colors/Finishes			
❑ *PC*	❑ *BN*	❑ *PN*	❑ *ORB*